PART NO.	Rear Axle
REV B	V1-161210

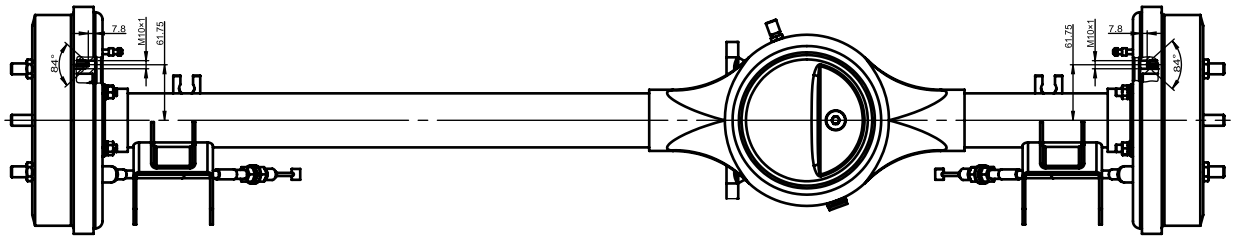

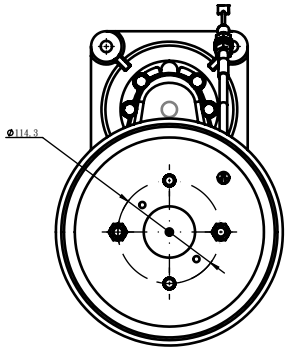

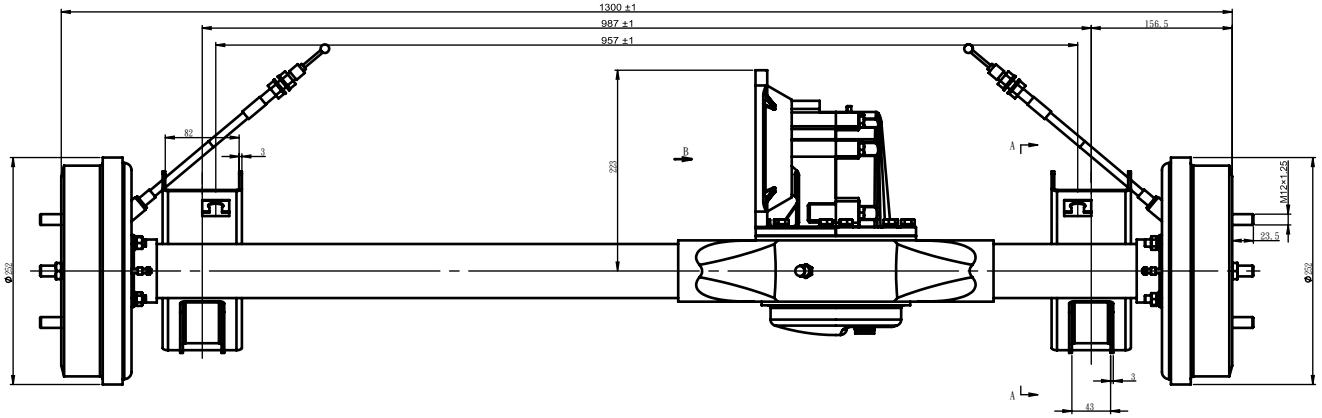

A-A
1 : 3

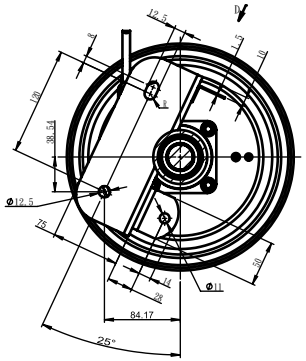

视图 B
1 : 3

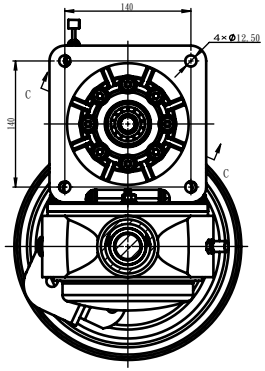

视图 D

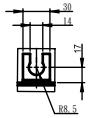

C-C
1 : 3

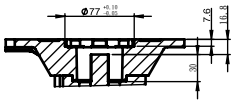

DWG	DATE
JONES CHO	
CHECK	DATE
SHIN WANG	
APPROVED	DATE
JONES CHO	

PROPRIETARY

THIS TECHINCAL DATA IS PROPRIETARY TO STARS CO., LTD.

STARS CO., LTD.
TAIWAN

TITLE
AC3 - AC5 Rear Axle

DOCUMENT NO.

REV. 161210

FILE:

SHEET 1 OF 1